MODEL KSF

BELT DRIVE CENTRIFUGAL FILTERED ROOF SUPPLY FAN

APPLICATION

Models KSF fans are primarily used for filtered make-up air in kitchen hood applications but may also be specified for make-up air in commercial and industrial applications such as manufacturing and assembly areas.

Model KSF's rugged design with heavy-gauge galvanized construction provides maximum weather protection, long life and the utmost in performance efficiency. The forward curved centrifugal blower provides efficient air flow at low sound levels.

Filters are washable and are reusable to reduce maintenance costs. Quick release hood latches make routine cleaning and maintenance fast and easy.

CONSTRUCTION

Blower

- Statically and dynamically balanced forward curved wheel.
- Prepunched mounting holes.
- Conduit opening for wiring from below unit.
- Disconnect switch is standard equipment.

Hood

- Heavy-gauge galvanized steel.
- Quick-release latches for removal from housing.
- Insulated for sound absorption and moisture barrier.
- 1 inch washable aluminum mesh filters.

Drives

- Machined cast iron adjustable motor pulleys standard through 3 HP.
- Pivoting motor plate for belt tensioning.
- Static resistant v-belts.

Bearings

- Heavy-duty ball bearing type.
- Prelubricated and permanently sealed.

Motors

- Open drip-proof construction is standard.
- Optional motor enclosures and types can be specified.

AMCA SEAL

S&P USA Ventilation Systems, LLC., Div. of Soler & Palau Ventilation Group, certifies that the Models KSF shown herein are licensed to bear the AMCA Seal. The ratings shown are based on test and procedures performed in accordance with AMCA Publication 211 and AMCA Publication 311 and comply with the requirement of the AMCA Certified Ratings Program.

LISTED POWER ROOF VENTILATOR
UL STANDARD 705

DIMENSIONAL DATA

MODEL KSF	A	B	C	D	ROOF OPENING	Average Ship Wt. Lbs.
9	24 1/4	24 1/2	17 7/8	19	19 1/2	215
10	27 3/8	28 1/2	21 1/8	22 1/2	23 1/2	245
12	32 3/4	32 1/2	26 1/2	27 7/8	28	255
15	37 3/8	32 1/2	34 1/4	30 1/8	28	310
18	41 3/8	36 1/2	38 1/4	33 3/8	32	350

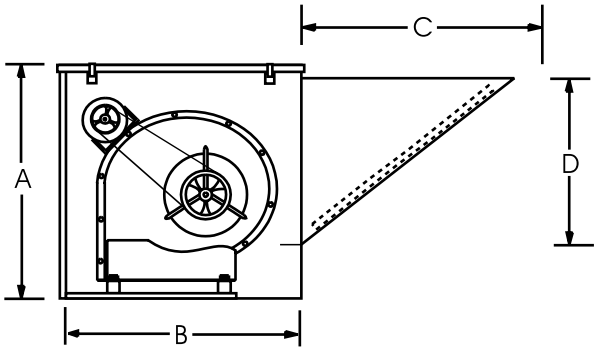

ACCESSORIES

MODEL KSF	RECOMMENDED 12" HIGH MOUNTING CURB		RECOMMENDED GRAVITY DAMPER		DAMPER MOTOR (LOOSE)
	OD	STOCK NO.	OD	STOCK NO.	STOCK NO.
9	22 1/2	92212221 ●	16	S3GA16CB ●	MP2781 ●
10	26 1/2	92612221 ●	20	S3GA20CB ●	MP2781 ●
12	31	2302.12.15CSF ●	24	S3GA24CB ●	MP2781 ●
15	31	2302.12.15CSF ●	24	S3GA24CB ●	MP2781 ●
18	35	2302.12.18CSF ▲	27	S3GA27CB ▲	MP2781 ▲

Ship Schedules:	
●	Next Day Shipment From Stock
▲	3 Day Shipment From Stock
♦	10 Day Shipment

ALL DIMENSIONS IN INCHES, WEIGHTS IN POUNDS. OD IS OUTSIDE DIMENSION OF SQUARE CURB AND DAMPER.
DUE TO CONTINUING RESEARCH, S&P RESERVES THE RIGHT TO CHANGE SPECIFICATIONS WITHOUT NOTICE.
Please refer to the General Catalog or contact the Factory for our Full Line of products available on standard shipping schedules.

MODEL KSF

Belt-Drive Centrifugal Filtered Roof Supply Fan

Model KSF	Motor Hp	Max. BHp	Single Phase 115/208/230 STOCK NO.	Three Phase 208/230/460 STOCK NO.	CFM	Outlet Velocity FPM	RPM at Static Pressure 1/8	1/4	3/8	1/2	5/8	3/4	1	1 1/4	1 1/2
9	1/4	0.25	KSF09ML1S ● (486-625) KSF09MH1S ● (625-904)	KSF09ML3S ▲ (486-625) KSF09MH3S ▲ (625-904)	375	426	486	-	-	-	-	-	-	-	-
					475	540	502	-	-	-	-	-	-	-	-
					575	653	526	694	-	-	-	-	-	-	-
					675	767	558	711	846	-	-	-	-	-	-
					775	881	597	733	861	-	-	-	-	-	-
					875	994	640	762	880	-	-	-	-	-	-
					975	1108	688	796	904	1009	-	-	-	-	-
					1075	1222	737	835	934	1031	1125	1214	-	-	-
					1175	1335	789	878	968	1058	1146	1232	-	-	-
	1/3	0.33	KSF09PH1S ●	KSF09PH3S ▲	1275	1449	842	923	1006	1089	1172	1253	1407	-	-
	1/2	0.50	KSF09QH1S ●	KSF09QH3S ●	1375	1563	895	971	1047	1124	1202	1278	1426	-	-
					1475	1676	950	1020	1091	1163	1235	1307	1447	-	-
	3/4	0.75	KSF09RH1S ●	KSF09RH3S ●	1575	1790	1005	1071	1137	1204	1271	1339	-	-	-
					1675	1903	1061	1122	1184	1247	1310	1374	-	-	-
					1775	2017	1118	1175	1233	1292	-	-	-	-	-
	1	1.00	KSF09SH1S ●	KSF09SH3S ●	1875	2131	1175	1229	1283	-	-	-	-	-	-
					1975	2244	1232	-	-	-	-	-	-	-	-
10	1/4	0.25	KSF10MH1S ●	KSF10MH3S ▲	1050	981	533	-	-	-	-	-	-	-	-
					1150	1075	564	662	756	-	-	-	-	-	-
					1250	1168	596	687	776	860	-	-	-	-	-
					1350	1262	628	714	797	877	955	-	-	-	-
					1450	1355	662	743	821	897	970	1042	-	-	-
	1/3	0.33	KSF10PH1S ●	KSF10PH3S ▲	1550	1449	697	773	847	918	989	1057	-	-	-
	1/2	0.50	KSF10QH1S ●	KSF10QH3S ●	1650	1542	732	804	874	942	1009	1074	1200	-	-
					1750	1636	767	836	903	967	1031	1093	1214	1330	-
					1850	1729	803	869	932	994	1054	1114	1230	1342	1449
	3/4	0.75	KSF10RH1S ●	KSF10RH3S ●	1950	1822	839	902	963	1022	1080	1137	1248	1356	-
					2050	1916	876	936	994	1051	1106	1161	1268	1372	-
					2150	2009	913	971	1026	1080	1134	1186	1289	-	-
	1	1.00	KSF10SH1S ●	KSF10SH3S ●	2250	2103	950	1005	1059	1111	1162	1213	1312	-	-
					2350	2196	987	1040	1092	1142	1192	1240	-	-	-
	1 1/2	1.50	KSF10TH1S ●	KSF10TH3S ●	2450	2290	1024	1076	1126	1175	1222	1269	-	-	-
					2550	2383	1062	1112	1160	1207	1253	-	-	-	-
					2650	2477	1099	1148	1195	-	-	-	-	-	-
					2750	2570	1137	1184	-	-	-	-	-	-	-
12	1/4	0.25	KSF12MH1S ●	KSF12MH3S ▲	1150	767	378	495	-	-	-	-	-	-	-
					1350	900	404	508	604	-	-	-	-	-	-
					1600	1067	444	532	618	-	-	-	-	-	-
	1/3	0.33	KSF12PH1S ●	KSF12PH3S ▲	1800	1200	479	556	635	711	-	-	-	-	-
	1/2	0.50	KSF12QH1S ●	KSF12QH3S ●	2000	1333	516	585	656	726	794	-	-	-	-
					2200	1467	555	617	681	745	808	870	-	-	-
	3/4	0.75	KSF12RH1S ●	KSF12RH3S ●	2400	1600	594	651	709	768	827	885	-	-	-
					2600	1733	635	687	740	794	849	903	1009	-	-
					2700	1800	655	705	757	808	861	913	1016	1114	-
	1	1.00	KSF12SH1S ●	KSF12SH3S ●	2800	1867	676	724	773	823	874	924	1024	-	-
					2900	1933	697	743	790	839	887	936	1033	-	-
					3000	2000	718	762	808	854	901	948	1042	-	-
	1 1/2	1.50	KSF12TH1S ●	KSF12TH3S ●	3100	2067	739	782	826	871	916	961	-	-	-
					3200	2133	760	802	844	887	931	975	-	-	-
					3400	2267	803	842	881	922	962	-	-	-	-
	2	2.00	N/A	KSF12VH3S ●	3600	2400	845	882	919	-	-	-	-	-	-
					3800	2533	888	-	-	-	-	-	-	-	-

Power ratings (BHP) do not include transmission losses. Performance certified is for installation type B-free inlet, ducted outlet. Performance ratings do not include the effects of appurtenances (accessories).
575/3/60 ODP Motors are available for most motor HP's - Refer to Price List.

Table shows fan RPM needed for required CFM and SP.
Shaded/Non-shaded area shows motor HP and stock number to order.

Please refer to the General Catalog or contact the Factory for our Full Line of products available on standard shipping schedules.

MODEL KSF

Belt-Drive Centrifugal Filtered Roof Supply Fan

Model KSF	Motor Hp	Max. BHp	Single Phase 115/208/230 STOCK NO.	Three Phase 208/230/460 STOCK NO.	CFM	Outlet Velocity FPM	RPM at Static Pressure 1/8	1/4	3/8	1/2	5/8	3/4	1	1 1/4	1 1/2	2
15	1/4	0.25	KSF15MH1S ●	KSF15MH3S ▲	1625	763	355	441	517	-	-	-	-	-	-	-
					2025	951	403	475	543	606	-	-	-	-	-	-
	1/3	0.33	KSF15PH1S ●	KSF15PH3S ▲	2425	1138	456	517	576	633	688	-	-	-	-	-
	1/2	0.50	KSF15QH1S ●	KSF15QH3S ●	2825	1326	512	565	617	668	717	765	-	-	-	-
	3/4	0.75	KSF15RH1S ●	KSF15RH3S ●	3230	1516	572	617	663	708	753	797	-	-	-	-
	1	1.00	KSF15SH1S ●	KSF15SH3S ●	3640	1709	633	674	714	755	795	835	913	-	-	-
	1 1/2	1.50	"KSF15TL1S ● (664-775) KSF15TH1S ● (775-835)"	"KSF15TL3S ● (664-775) KSF15TH3S ● (775-835)"	3840	1803	664	702	741	779	817	855	930	1002	-	-
					4045	1899	695	731	768	805	841	877	949	1018	1085	-
					4245	1993	726	761	795	830	865	900	968	1035	1100	-
	2	2.00	N/A	KSF15VH3S ●	4445	2087	757	790	823	857	890	923	989	1053	-	-
					4645	2181	788	820	851	883	915	947	1010	-	-	-
					4850	2277	820	850	881	911	942	972	1033	-	-	-
	3	3.00	N/A	KSF15WH3S ●	5050	2371	851	880	910	939	968	998	-	-	-	-
					5200	2441	875	903	932	960	989	-	-	-	-	-
					5400	2535	907	934	961	-	-	-	-	-	-	-
					5600	2629	938	-	-	-	-	-	-	-	-	-
18	1/4	0.25	KSF18MH1S ▲	KSF18MH3S ▲	2200	748	324	386	-	-	-	-	-	-	-	-
					2400	816	341	400	454	-	-	-	-	-	-	-
	1/3	0.33	KSF18PH1S ▲	KSF18PH3S ▲	2800	952	379	431	480	526	570	611	-	-	-	-
					3000	1020	398	448	495	539	581	621	696	-	-	-
	1/2	0.50	KSF18QH1S ▲	KSF18QH3S ▲	3400	1156	438	483	526	566	605	643	714	780	842	-
					3600	1224	458	502	542	581	619	655	724	789	849	961
	3/4	0.75	KSF18RH1S ▲	KSF18RH3S ▲	4200	1429	520	559	595	630	664	696	759	819	876	983
	1	1.00	KSF18SH1S ▲	KSF18SH3S ▲	4600	1565	562	599	632	665	696	727	786	842	897	-
	1 1/2	1.50	KSF18TH1S ▲	KSF18TH3S ▲	5200	1769	626	659	690	720	749	776	830	883	933	-
					5400	1837	648	680	710	739	767	794	846	897	-	-
	2	2.00	N/A	KSF18VH3S ▲	5800	1973	691	721	750	777	803	829	879	-	-	-
					6000	2041	713	742	770	796	822	847	-	-	-	-
	3	3.00	N/A	KSF18WH3S ▲	6400	2177	756	784	810	836	-	-	-	-	-	-
					6600	2245	778	805	831	-	-	-	-	-	-	-

Power ratings (BHP) do not include transmission losses.
Performance certified is for installation type B-free inlet, ducted outlet.
Performance ratings do not include the effects of appurtenances (accessories).
575/3/60 ODP Motors are available for most motor HP's - Refer to Price List.

Table shows fan RPM needed for required CFM and SP.
Shaded/Non-shaded area shows motor HP and stock number to order.

Please refer to the General Catalog or contact the Factory for our Full Line of products available on standard shipping schedules.

MODEL KSF Sound Power Data

Model KSF	RPM	SP	Sound Power RE 10^{-12} Watts Octive Bands, Hz								L_{WD} dB(A)
			63	125	250	500	1000	2000	4000	8000	
9	500	0.125	76	66	57	52	49	46	42	34	57
	600	0.125	84	74	64	59	57	54	51	43	65
	700	0.125	88	80	70	64	62	60	58	50	70
	700	0.250	87	79	68	61	58	55	52	45	68
	800	0.125	90	85	75	69	66	64	62	56	75
	800	0.250	90	84	74	66	63	61	58	52	73
	900	0.125	93	89	80	72	70	67	65	60	79
	900	0.250	92	89	79	71	68	65	63	58	78
	1000	0.125	94	93	84	76	73	71	68	64	82
	1000	0.250	94	93	83	75	71	69	66	62	81
	1000	0.500	93	91	81	72	67	64	61	57	79
	1100	0.250	96	96	87	78	74	72	69	66	85
	1100	0.500	96	95	85	76	71	68	66	62	83
	1200	0.125	98	99	91	81	78	76	73	71	88
	1200	0.500	97	99	89	79	74	72	69	66	87
	1300	0.250	99	102	93	83	79	77	74	72	90
	1300	1.000	98	101	90	81	73	70	67	65	88
	1400	0.500	100	103	95	85	79	78	75	73	92
	1500	1.000	101	104	96	86	79	76	73	71	92
	1600	1.500	101	104	98	88	79	75	72	70	93
10	600	0.125	83	77	67	65	62	61	58	51	69
	700	0.125	87	83	73	70	67	66	64	58	74
	700	0.250	86	82	71	67	64	62	60	53	72
	800	0.125	89	87	78	74	71	70	68	63	79
	800	0.250	89	86	77	72	69	67	65	60	77
	900	0.125	91	90	83	77	75	73	71	67	82
	900	0.250	91	90	82	76	73	71	69	65	81
	900	0.500	91	89	80	73	69	67	65	60	78
	1000	0.125	93	94	87	80	78	76	74	71	85
	1000	0.250	93	93	86	79	76	74	73	69	84
	1000	0.500	93	92	84	76	73	71	69	65	82
	1100	0.125	95	96	90	82	81	78	77	74	88
	1100	0.250	95	96	90	82	79	77	75	73	87
	1100	0.500	94	95	89	80	77	75	73	69	86
	1200	0.500	96	98	92	83	80	78	76	73	89
	1200	1.000	96	98	91	80	76	73	71	68	87
	1300	1.000	97	100	94	83	79	77	75	72	90
	1400	1.000	98	101	96	86	82	80	78	75	92
	1400	1.500	98	101	97	85	79	76	74	71	92
	1500	1.500	100	103	99	88	82	79	77	74	94
12	400	0.125	69	61	57	56	52	47	40	32	58
	500	0.125	78	71	65	64	62	59	53	46	67
	500	0.250	76	69	62	61	58	53	47	39	63
	600	0.125	84	78	71	70	68	66	62	55	74
	600	0.250	83	76	68	67	64	61	55	47	70
	700	0.125	87	83	77	74	73	71	68	62	79
	700	0.250	86	82	74	71	70	68	63	56	76
	700	0.500	85	80	71	68	67	63	57	50	72
	800	0.125	89	87	81	78	77	75	73	67	83
	800	0.250	89	86	80	76	75	73	69	63	81
	800	0.500	88	84	76	72	71	68	62	55	76
	900	0.125	92	91	85	81	80	79	76	72	86
	900	0.250	91	90	84	80	79	77	74	69	85
	900	0.500	90	89	82	76	75	73	69	62	81
	1000	0.125	93	94	89	84	83	81	80	76	89
	1000	0.250	93	94	88	83	82	80	78	73	88
	1000	0.500	92	93	86	80	79	77	74	68	85
	1000	1.000	91	91	84	77	75	73	68	62	82
	1100	1.000	93	95	87	79	78	76	72	65	85
	1200	1.500	95	97	90	81	80	78	74	68	88

The sound power level ratings shown are in decibels referred to 10-12 watts calculated per AMCA Standard 301. The A-weighted sound ratings shown have been calculated per AMCA Standard 301. Values shown are for outlet Lwo sound power levels for: Installation Type-B: free inlet, ducted outlet. Ratings include the effects of duct end connection. dBA levels are not licensed by AMCA International.

MODEL KSF Sound Power Data

Model KSF	RPM	SP	Sound Power RE 10^{-12} Watts Octive Bands, Hz								L_{wo} dB(A)
			63	125	250	500	1000	2000	4000	8000	
15	450	0.125	76	71	68	67	65	64	59	53	71
	550	0.125	83	78	74	74	70	70	66	60	77
	550	0.250	81	76	72	72	68	67	63	57	75
	650	0.125	88	83	78	78	75	74	71	66	81
	750	0.125	93	87	82	80	78	78	76	71	85
	750	0.250	92	87	81	80	77	77	75	69	84
	750	0.500	90	84	79	78	75	74	72	66	81
	850	0.125	95	91	86	83	82	81	79	75	88
	850	0.250	95	91	85	83	81	80	79	74	87
	850	0.500	93	90	84	82	80	79	77	72	86
	950	0.125	97	95	89	86	85	84	82	78	91
	950	0.250	97	94	89	86	85	83	82	77	91
	950	0.500	96	93	88	85	84	82	80	76	90
	950	1.000	94	90	84	82	80	78	76	70	86
	1050	0.125	99	98	92	89	88	86	85	81	94
	1050	0.250	99	97	92	88	88	85	84	81	93
	1050	0.500	98	97	91	88	87	84	83	79	93
	1050	1.000	96	94	88	85	85	82	80	76	90
	1150	1.000	98	98	93	89	89	85	84	81	94
	1150	1.500	97	96	89	86	86	82	80	76	91
18	400	0.125	77	71	66	64	64	61	55	48	68
	500	0.125	84	78	73	71	69	68	63	57	75
	500	0.250	83	77	72	69	68	66	61	53	73
	600	0.125	90	84	78	76	74	73	70	63	80
	600	0.250	89	83	77	75	73	72	68	61	79
	600	0.500	88	83	75	73	71	70	65	57	77
	700	0.125	94	89	83	80	78	78	75	68	84
	700	0.250	94	88	82	79	77	77	74	67	84
	700	0.500	93	88	81	77	75	75	72	64	82
	800	0.125	97	93	87	83	81	81	78	73	88
	800	0.250	96	93	87	83	81	80	78	72	87
	800	0.500	96	92	86	82	79	79	76	70	86
	900	0.125	99	97	91	87	84	83	82	77	91
	900	0.250	99	96	90	86	84	83	81	76	91
	900	0.500	98	96	90	85	83	82	80	74	90
	900	1.000	96	95	88	83	81	80	78	71	88
	1000	0.500	100	99	93	88	86	85	83	78	93
	1000	1.000	99	98	92	87	84	83	81	76	91
	1000	1.500	99	99	92	85	83	81	80	74	90
	1100	1.500	100	101	95	88	86	84	83	78	93

The sound power level ratings shown are in decibels referred to 10-12 watts calculated per AMCA Standard 301. The A-weighted sound ratings shown have been calculated per AMCA Standard 301. Values shown are for outlet Lwo sound power levels for: Installation Type-B: free inlet, ducted outlet. Ratings include the effects of duct end connection. dBA levels are not licensed by AMCA International.

Please refer to the General Catalog or contact the Factory for our Full Line of products available on standard shipping schedules.